REVISIONS			
REV.	DESCRIPTION	DATE	APPROVED
01	Standard filterboxes introduced. Filterboxes F7 redesigned	2016-03-09	EL
02	Filterbox large info added. Panel mounted PLC C4 view added	2017-08-25	EL
03	Filter box handles updated, unit width added	2017-11-23	EL

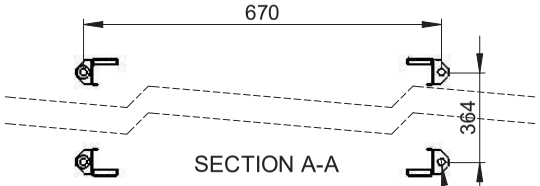

∅13,50 Attachment holes (4x)

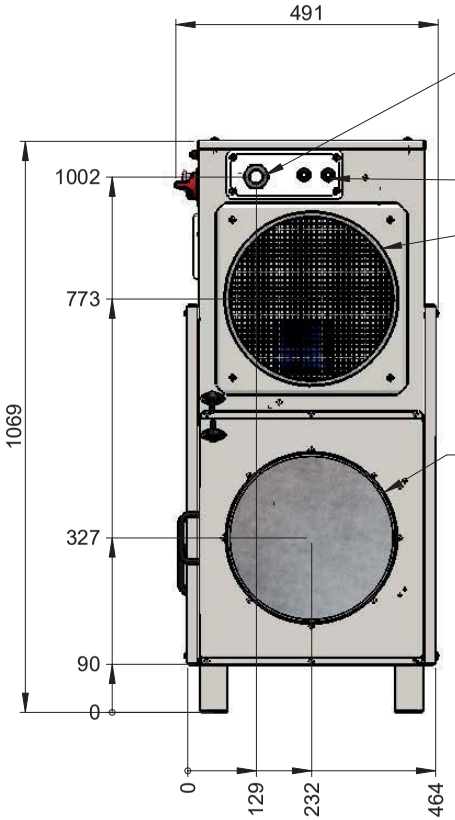

Electric supply

Cable glands for customer connections

Ø315 Dry air outlet

Filter box large
Included in following options:
- Insulated reg inlet
- F7 reg air filter

Ø315 Process air inlet

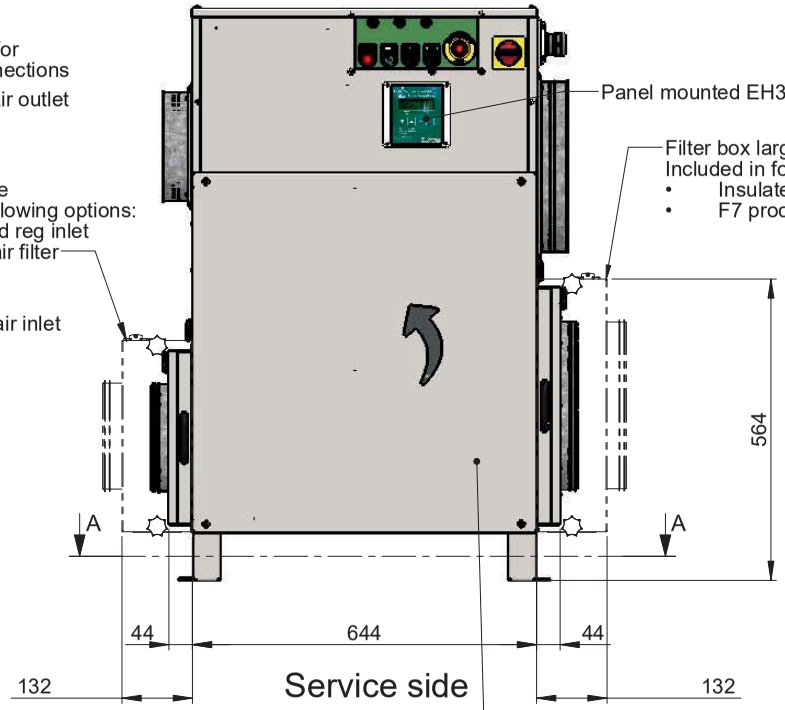

Panel mounted EH3/EH4 (option)

Filter box large
Included in following options:
- Insulated proc inlet
- F7 proc air filter

Removable front cover
rotor- and rotor motor access
Service area in front of unit = 750mm x 750mm

Removable top cover
Elcetrical cabinet access
Service space above unit = 500 mm

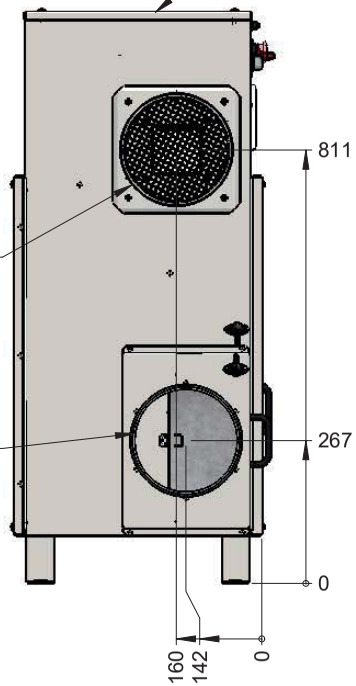

Ø200 Wet air outlet

Ø200 Reg air inlet

Packaging dimensions:

WxDxH = 850x600x1200
Weight ~70 kg

Panel mounted PLC C4 (option)

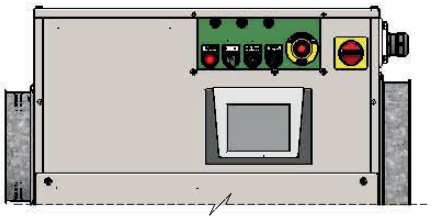

This document and its contents are the exclusive property of DST Seibu Giken and must not be copied, reproduced, transmitted or communicated to any other party or used for purposes not expressly permitted by us.

Seibu Giken DST AB
+46 8 445 77 20
www.dst-sg.com

Designed by: Erik L	Date: 2013-10-31	Title/Description: Dimensionsritning, Dimension drawing	
Drawn by: Erik L	Date: 2014-03-10		
Approved by: -	Date:		
Material:	Thickness: t=	RL-60 R/LR	
Status: Construction	Tolerance: ISO 2768-1m		
Scale: 1:10 / Format: A3 / Sheet/Sheet: 1/4 / Rev Part: 02+ / Weight (Kg): 68.000		Drawing no: DST05145	Rev: 03