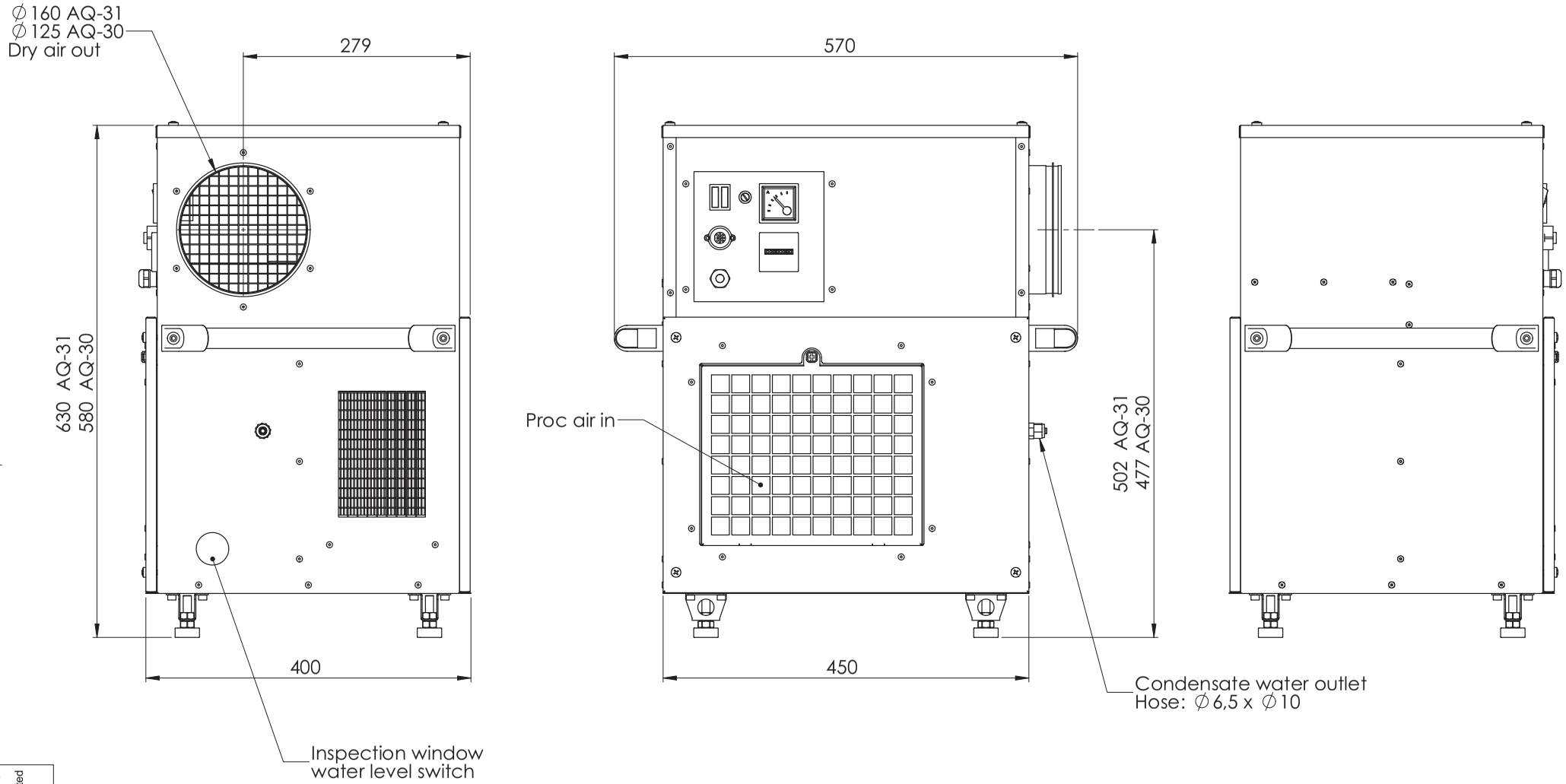

This document and its contents are the exclusive property of DST Seibu Giken and must not be copied, reproduced, transmitted or communicated to any other party or used for purposes not expressly permitted by us.

Seibu Giken DST AB
+46 8 445 77 20
www.dst-sg.com

Designed by: Stefan O	Date: 2016-08-19	Title/Description: Dimensionsritning / Dimension drawing	
Drawn by: Stefan O	Date: 2016-08-19		
Approved by: -	Date:		
Material:	Thickness: t=	AQ-30/-31	
Status: Construction	Tolerance: ISO 2768-1m	Drawing no: DST07367	Rev: 00+
Scale: 1:5	Format: A3	Sheet/Sheet: 1/1	Rev Part: 00+
Weight (Kg): 34 / 38			